ITEM #

MODEL #

NAME #

SIS #

AIA #

Spin Dryers
Vegetable Dryer, 5 Kg - Automatic cycle



603354 (DEL40F) 5 kg vegetable dryer with 32 lt basket volume. Spin drying automatic cycle

Short Form Specification

Item No.

Body in stainless steel and basket in high quality resin. Fully opening plastic lid, equipped with a micro switch to stop the machine if lid is opened. Two cycles: "automatic" which alternates rotation with several sudden stops (for all vegetables); "manual" thanks to the adjustable timer up to 59 minutes (for delicate vegetables). Flat and waterproof touch button control panel. Rotation speed: 450 rpm. Residual water is eliminated through an outlet pipe. IP55 and IP34 protection. Supplied with 32 litre basket. Load capacity: 5 kg- 9 lettuce heads.

APPROVAL:

Main Features

- Spin drying cycle with short drying time (1 to 2 minutes).
- "Automatic" cycle alternates rotation to several sudden stops, suitable for all vegetables.
- "Manual" cycle uses adjustable timer up to 59 minutes, to be used for delicate vegetables.
- Outlet pipe eliminates residual water.
- Timer with digital display and countdown.
- Heavy vegetables load per cycle: 5 Kg
- Light vegetables load per cycle: 9 units of lettuce heads.
- Safety device stops the machine when the cover is opened.
- Electrical braking system to stop basket rotation in a matter of seconds at the end of the cycle or when lid is opened.

Construction

- Stainless steel body.
- Resin basket, 32 liters in capacity.
- Basket rotates at approximately 450 rpm.

Included Accessories

- 1 of Basket for 5 kg vegetable dryer PNC 653131

Optional Accessories

- Basket for 5 kg vegetable dryer PNC 653131 ❑

Spin Dryers
Vegetable Dryer, 5 Kg - Automatic cycle

Front

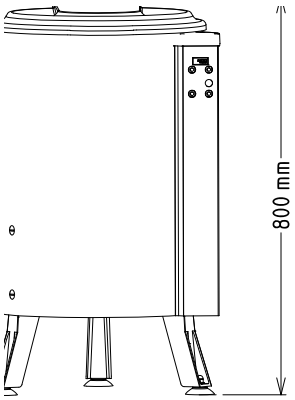

Side

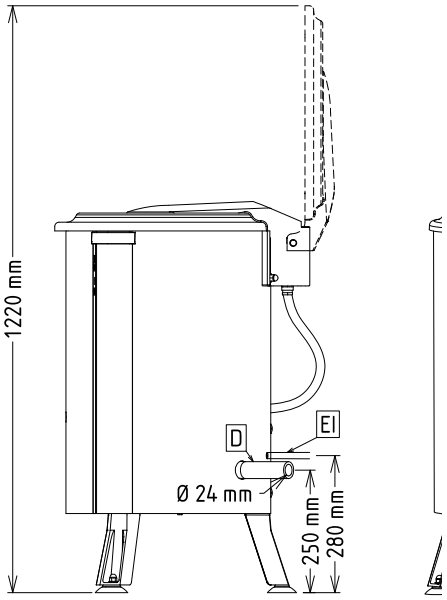

D = Drain
EI = Electrical inlet (power)

Top

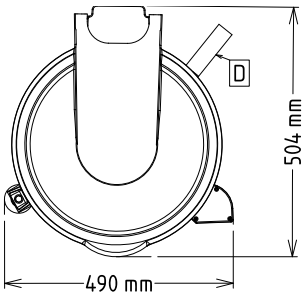

Electric

Supply voltage:	220-240 V/1N ph/50/60 Hz
Electrical power, max:	0.37 kW
Total Watts:	0.37 kW

Key Information:

External dimensions, Width:	460 mm
External dimensions, Depth:	540 mm
External dimensions, Height:	800 mm
Shipping weight:	47 kg
Well Capacity:	32 lt
Usable well capacity:	32 lt
Load per cycle - light vegetables:	9 units of lettuce
Load per cycle - heavy vegetables:	5 KG VEGETABLES

The company reserves the right to make modifications to the products without prior notice. All information correct at time of printing.

2026.11.20